e:touch 8"

Information for Use

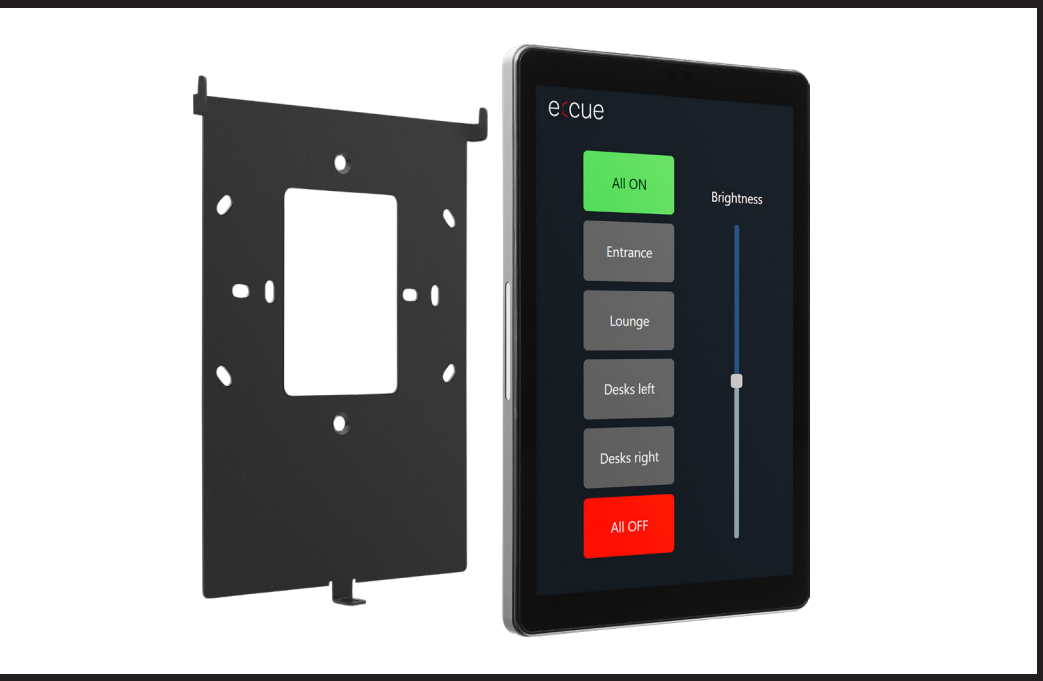

Read the Information for Use and the Safety Instructions carefully. Subject to modification without prior notice.
Typographical and other errors do not justify any claim for damages. Modification of the product is prohibited.
This document is designed for electricians and system administrators of the product.
All product names and trademarks mentioned in this manual are trademarks of their respective owners.
Except for internal use, relinquishment of the instructions to a third party, duplication in any type or form - also extracts - as well as exploitation and / or communication of the contents is not permitted.

Downloads and more information at:
www.ecue.com

IC: CL24100000255

Edition:
20.11.26 [EN_etouch8"_Setup_v1p7]

Published by:
Traxon Technologies Europe GmbH
Im Dörener Feld 8
33100 Paderborn, Germany

©2026 Traxon Technologies Europe GmbH
All rights reserved

Traxon Technologies Europe GmbH
Sales Operations
Im Dörener Feld 8
33100 Paderborn, Germany
+49 5251 54648-0
support@ecue.com

Table of Contents

1	**General device description**		03
	1.1	Delivery content	03
	1.2	Optional accessories	03
	1.3	Connectors and Interfaces	03
	1.4	Product specifications	04
2	**General remarks**		04
	2.1	Transport	04
	2.2	Unpacking	04
	2.3	Warranty regulations	05
	2.4	Maintenance and Repair	05
	2.5	Disposal	05
	2.6	Support	05
3	**Installation**		06
	3.1	Ethernet connection	06
	3.2	Power supply	06
	3.3	Mounting	07
4	**Configuration**		07
	4.1	Ethernet / Wi-Fi	07
	4.2	Start-up application	08
5	**SymphoTouch update**		08
	5.1	Update with internet access	08
	5.2	Update without internet access	08
6	**Dismounting**		09
7	**Certifications**		10
8	**Dimensions**		10

©2026 traxon technologies. All rights reserved.

1 General device description

With the e:touch 8"' you have customizable control points for your lighting installation. The capacitive touch screen allows a smooth selection of commands on the individualized display. Running the SymphoTouch app, the e:touch 8"' is a control input for e:cue SYMPHOLIGHT projects, enabling flexible and creative UI design concepts. Polish your project at the user's touch point, using the wall mountable e:touch 8".

Highlights of the e:touch 8"

- 8 inch touch screen
- Power-over-Ethernet
- Customizable UI (Buttons/Fader) via e:cue software
- Simple mounting in standard with in-wall fittings

1.1 Delivery content

Delivery content of the e:cue e:touch 8":

1. e:cue e:touch 8" CL24100000255
2. Mounting plate
3. EU standard in-wall box
4. e:cue SymphoTouch app pre-installed
5. Welcome card incl. password, Safety instructions

If safety instructions are missing, please contact Traxon e:cue to receive a new copy.

1.2 Optional accessories

- Ethernet Data Cable (RJ45) AA556130055
- SYMPL Switch AM313830035

1.3 Connectors and Interfaces

Rear

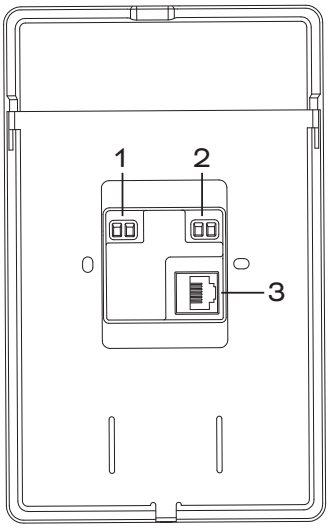

1	Power supply (V–, V+ left to right) (p. 06)
2	RS-485 (A, B left to right) - currently not supported
3	Ethernet port (p. 06)

content

 ©2026 traxon technologies. All rights reserved.

Top

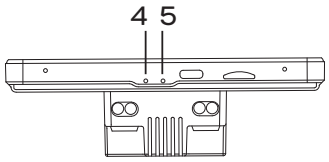

4	“RESET” button (p. 07)
5	“SET” button (p. 07)

1.4 Product specifications

Dimensions (W x H x D)	124 x 200 x 11 mm / 4.88 x 7.87 x 0.43 in
Weight	340 g / 0.75 lb
Power supply	12 ... 24 V DC, 50 Hz or PoE IEEE 802.3af on RJ45
Power consumption	24 W @ 12 V DC 13 W @ PoE
Operating temperature	-10 ... 50 °C / 14 ... 122 °F
Storage temperature	-20 ... 60 °C / -4 ... 140 °F
Op. / Stor. humidity	0 ... 75% RH, non-condensing
Protection class	IP20
Installation	Indoor installation only
Mounting	Wall mount on standard in-wall mounted boxes
Certificates	CE, UKCA, RoHS

Interface specifications

Display size	8 inch
Resolution	800 x 1280
Brightness	300 nt
System interface	1 x e:net / Ethernet 10/100 Mbit/s, RJ45
Sensors	Proximity sensor
Outputs	Speaker
User interfaces	Customizable UI (Buttons/Fader) via e:cue software

↑ content

2 General remarks

2.1 Transport

Only transport the device in its original packaging. This protects the device from damage.

2.2 Unpacking

Only unpack the e:cue e:touch 8" at its installation location. To protect the device against condensation water, unpack it and wait until all moisture remaining in the device

 ©2026 traxon technologies. All rights reserved.

has evaporated. Condensation can occur when the device is moved from a cold to a warm location. Keep the packaging for use in case of further transport. Inspect all parts for completeness regarding chapter „1.1 Delivery content“ on page 03. If there is apparent damage to the device or parts are missing from the delivery scope, please contact the Traxon e:cue Support service.

2.3 Warranty regulations

Depending on the product, warranty regulations are of different duration. The warranty time is usually noted in the quote and in the order confirmation. See www.traxon-ecue.com/terms-and-conditions for details. Legal warranty regulations apply in any case.

2.4 Maintenance and Repair

Only external cleaning might be necessary. This cleaning may only be carried out by skilled personnel. To clean the device, disconnect it from the line power supply. Disconnect all devices connected to the server. Do not use any cleaning agents containing solvents (e.g. acetone, alcohol, or thinner) or abrasives. The housing surface can be cleaned with a moist, lint-free cloth. Ensure that no water penetrates into the housing. Otherwise, this could damage the electronics.



- Before dismounting, appropriate measures must be taken to protect the respective components against damage caused by electrostatic discharge (ESD protection).
- Do not try to repair the device. Return it to your Traxon e:cue distributor for replacement or repair.

2.5 Disposal



Batteries and technical appliances must not be disposed of with domestic waste, but should be handed in at the appropriate collection and disposal points.

The proper disposal of packing materials and of the device is the responsibility of the respective user and for his account; in all other matters, the retrieval obligation for packing materials and the device is subject to the statutory regulations.

2.6 Support

In case of technical problems or questions regarding installation and repair please contact:

Traxon Technologies Europe GmbH
Customer Service
Im Dörener Feld 8
33100 Paderborn, Germany
+49 (5251) 54648-0
support@ecue.com

content

 ©2026 traxon technologies. All rights reserved.

3 Installation

⚠

Cybersecurity disclaimer

In order to protect building automation systems, plants, systems, machines and networks against cyber threats, it is necessary to implement – and continuously maintain – a holistic, state-of-the-art security concept. Traxon's product portfolio including this product you are about to install only forms one element of such a concept. Keep into account that Traxon's products including the product you are about to install contain the ability of third parties to connect to the device via USB, wired and wireless network interfaces.
You are responsible for preventing unauthorized access to your building automation system, plants, systems, machines and networks which should only be connected to an enterprise network or the internet if and to the extent such a connection is necessary and only when appropriate security measures (e.g. firewalls and/or network segmentation) are in place. Additionally, Taxon's guidance on appropriate security measures should be taken into account.
Taxon's portfolio undergoes continuous development to make it more secure. Traxon strongly recommends that updates are applied as soon as they are available and that the latest versions are used. Use of versions that are no longer supported, and failure to apply the latest updates may increase your exposure to cyber threats.
Traxon strongly recommends to comply with security advisories on the latest security threats, patches and other related measures.

The installation of the e:touch 8" consists of system ports connections, to power supply and of mounting the device. The sequence of cabling is not defined.

3.1 Ethernet connection

The pin-assignment of the Ethernet port corresponds to RJ45 standards. You can use every common Ethernet component, like cable. Connect the e:touch 8" at the designated Ethernet interface with a patch cable (RJ45, CAT5).

3.2 Power supply

The e:cue e:touch 8" can be powered via Power-over-Ethernet (PoE) or by an external power supply (PSU).

PoE:
Connect an Ethernet connection from a power sourcing device.

External power supply:
Connect the e:touch 8" to a 12 ... 24 V DC power supply unit that complies with the local regulations. Present power supply equates to the status "On" or running of the e:touch 8".
To connect the device to a power supply unit, lay the wires as stated on the device.

↑ content

 ©2026 traxon technologies. All rights reserved.

3.3 Mounting

The e:touch 8" can be mounted in most standard in-wall mounted boxes (DE, US, UK, JP etc.). It is recommended to install it in a double-box to have more room for the cabling.

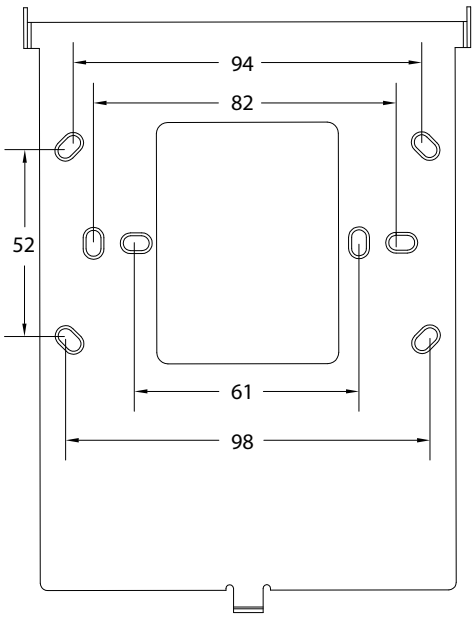

Attach the mounting plate to the wall. Hook the device to the mounting plate after all connections are done and fasten it with a screw at the bottom.

4 Configuration

To setup the network connection and the start-up application, configure the Android settings:

1. Press the “SET” button on the top side of the frame with a needle.
2. The Android settings opens, requesting a login. Enter the device settings password. The password is listed on the welcome card.
3. Configure the network connection and the start-up behavior (see “4.1 Ethernet / Wi-Fi” (page 07) and “4.2 Start-up application” (page 08)).
4. Exit the Android settings and restart the device by pressing the “RESTART” button on the top side of the frame with a needle.

4.1 Ethernet / Wi-Fi

The e:touch 8" supports two network connections: Wi-Fi and Ethernet together with PoE.

1. Go to “Network & internet”.

For Wi-Fi connection:

2. Enable the slider switch next to “Wi-Fi”. (Disable when using an Ethernet connection.)

For Ethernet connection:

3. Go to “Ethernet”

content

 ©2026 traxon technologies. All rights reserved.

4. Enable the slider switch next to “Ethernet”. (Disable when using an Wi-Fi connection.)
5. To configure the IP address go to “Ethernet Ip mode”.
6. Tap on “dhcp” for automatic IP configuration or “static” to enter a specific IP address.

— Only one network connection can be active at one time. When the e:touch 8" is connecting to a Wi-Fi network, then the Ethernet connection must first be deactivated, and vice versa.

— When using PoE and the Ethernet connection is disabled in the settings, then the power supply is still provided via Ethernet.

4.2 Start-up application

To start the SymphoTouch app automatically after booting the device, configure the Android settings:

1. Go to “Accessibility”.
2. At the category “Interaction controls” go to “Boot Application”.
3. Click the button “Select startup application”.
4. Select the SymphoTouch app.
5. Click “Quit” to exit the “Boot Application”.

On the next start-up of the e:touch 8" the SymphoTouch app will run automatically.

content

5 SymphoTouch update

Normally, the e:touch does not have internet access. To download the latest update of the SymphoTouch app from the Google Play Store (“5.1 Update with internet access” (page 08)) is then not possible. In this case use alternative procedures (“5.2 Update without internet access” (page 08)).

5.1 Update with internet access

Log in into the Google account and install the latest update of the SymphoTouch app.

5.2 Update without internet access

1. Download the latest SymphoTouch .apk or ask support@traxon-ecue.com for the latest SymphoTouch.apk file.
2. Connect the e:touch 8" to the Windows machine with a USB-C cable.
3. Press the “SET” button on the top side of the e:touch 8" frame with a needle.
4. Enter the password to open the settings.
5. Open the Device info setting and tap the build number 7 times to unlock the developer options and check that “USB debugging” is active.
6. Install Android Debug Bridge (ADB or Minimal Fastboot and ADB).
7. Open a command prompt in the ADB installation folder.

 ©2026 traxon technologies. All rights reserved.

8. Enter the following command to test whether the tablet is recognized as an ADB device via USB-C:

```
adb devices
```

You should see an ID and “device”.

5.2.1 *.APK file format

1. Run the following command in the command prompt:

```
adb install “SymphoTouch.apk”
```

The prompt should show “Success” and the SymphoTouch app on the e:touch 8" should be closed.

2. Reopen SymphoTouch on the e:touch 8" and check the version number under “About SYMPHOTOUCH”.

5.2.2 *.XAPK file format

1. Rename your *.xapk file to *.zip.
2. Unzip the file to the ADB installation folder. You will see a few *.apk files, and sometimes also a folder Android which includes a .obb file (you can ignore the following files: icon.png and manifast.json).
3. Run the following command in the command prompt:

```
adb install-multiple "com.osram.SymphoTouch.apk" "config.arm64_v8a.apk" "config.en.apk" "config.fr.apk" "config.mdpi.apk"
```

4. If your *.xapk file contains a *.obb file (you should see a folder named “Android”), then run also the following:

```
adb push Android\obb\com.osram.SymphoTouch /storage/emulated/0/Android/obb/
```

The prompt should show “Success” and the SymphoTouch app on the e:touch 8" should be closed.

5. Reopen SymphoTouch on the e:touch 8" and check the version number under “About SYMPHOTOUCH”.

6 Dismounting

⚠ Before dismounting, appropriate measures must be taken to protect the respective components against damage caused by electrostatic discharge (ESD protection).

Dismount the e:touch 8" by unfastening the device from the mounting plate. Disconnect all attached cables. Unfasten the mounting plate from the wall. The dismounting is completed.

↑ content

 ©2026 traxon technologies. All rights reserved.

7 Certifications

CE

UK CA

8 Dimensions

All dimensions in mm

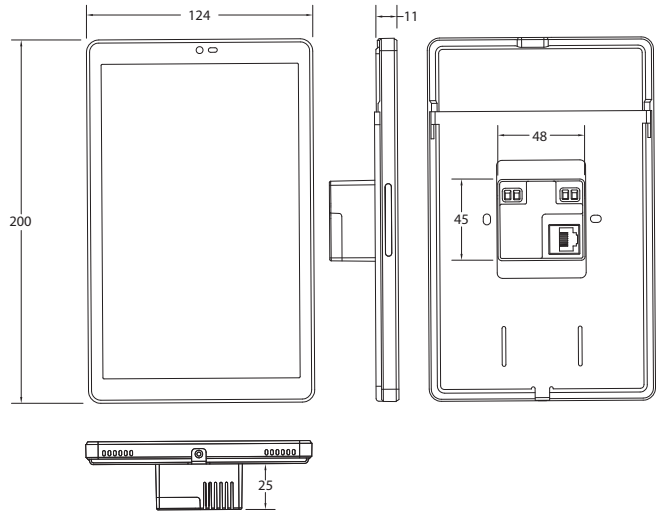

content

Please check for the latest updates and changes on the Traxon website.

© 2026 TRAXON TECHNOLOGIES. ALL RIGHTS RESERVED.

www.traxon-ecue.com

MEMBER OF PROSPERITY GROUP